Molded Pulp Options

Will the tray be visible?

Is there a budget for premium materials?

Yes

WET PRESS

Thickness is generally 0.7-1.2mm. The surface is smooth. Cost is higher for premium look and feel. The scope of application of wet-pressed products is generally high-end cosmetics, electronics, or premium food products. Often replaces foam and plastic. Can be color-matched.

70% SUGARCANE PULP + 30% RAW WOOD

Sugarcane pulp is made from repurposed agricultural waste that can be utilized in the manufacture of trays for a more eco friendly product. Smooth surface.

A4 PAPER

100% recycled paper. Tray is fully recyclable. Smooth surface.

BAMBOO

A highly sustainable material due to its rapid growth rate and ability to regenerate after being harvested. Tray is fully recyclable. Smooth surface.

No

DRY PRESS

Thickness is generally 1.5-2.5mm. The surface is rough. Generally, dry pressing is divided into 2 kinds of materials, sugarcane pulp and corrugated paper. The scope of application for dry-pressed products is generally large items such as hardware, lamps, fruits, etc. Advantages of dry pressing: good pressure resistance, relatively low unit price and heavy bearing capacity. Cost is lower than wet press.

70% SUGARCANE PULP + 30% RAW WOOD

Sugarcane pulp is made from repurposed agricultural waste that can be utilized in the manufacture of trays for a more eco friendly product.

A4 PAPER

100% recycled paper. Tray is fully recyclable. Smooth surface.

CORRUGATED PAPER

Typically seen on egg trays, trays used to ship candles, and cradles to ship roll stock. Fully recyclable.

MOST PREMIUM

LEAST PREMIUM

MOLDED PULP

Molded pulp packaging is a green alternative to plastic and foam trays. It can be formed using a variety of materials like recycled corrugated and sugarcane. The fully formed nature of the products means there is no assembly required versus corrugated or SBS diecut inserts.

Pulp Manufacturing & Material Pricing Case Study

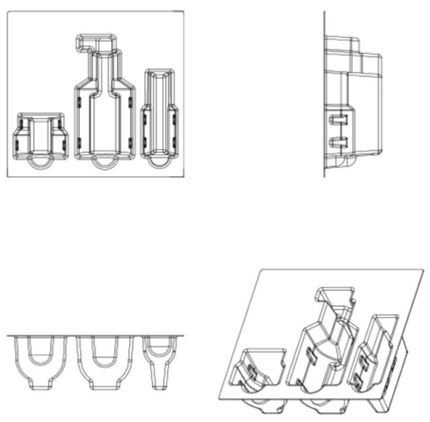

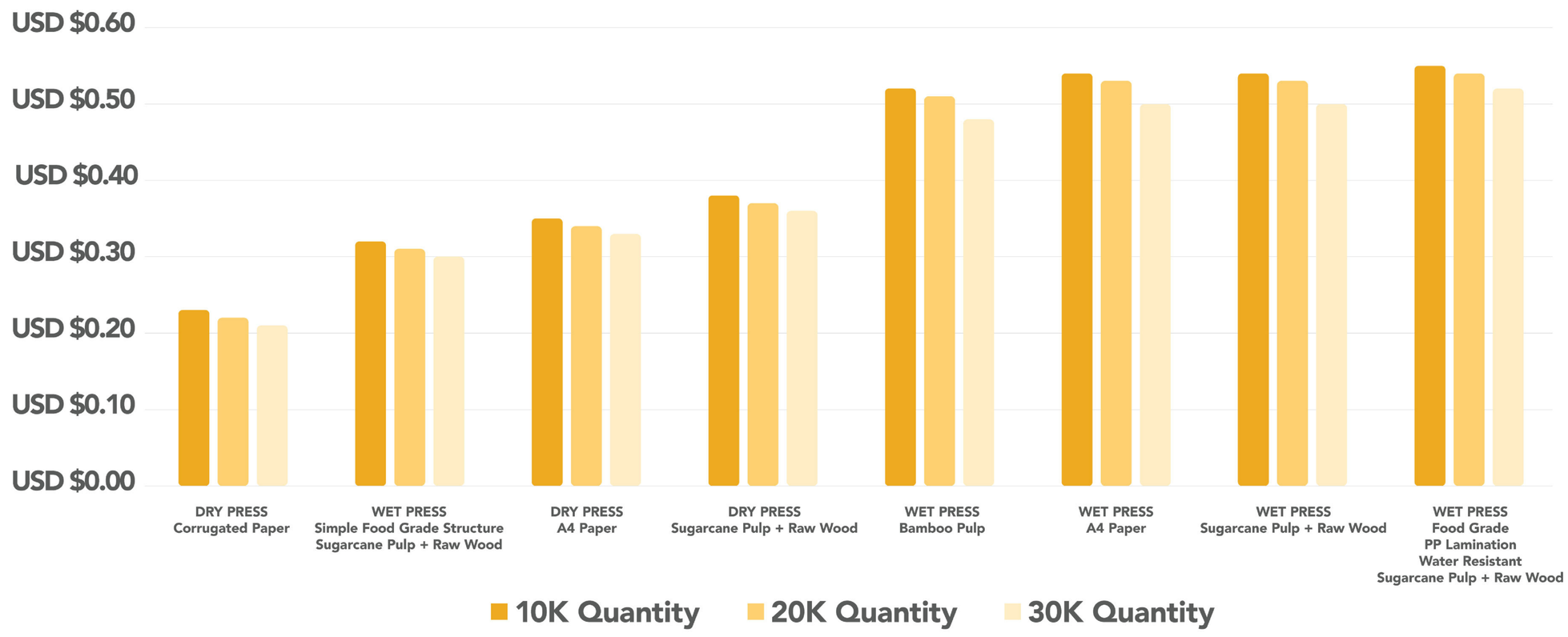

*Prices above are for reference only and are to be used solely to illustrate comparative costs

Plastic vs. Paper Pricing Case Study

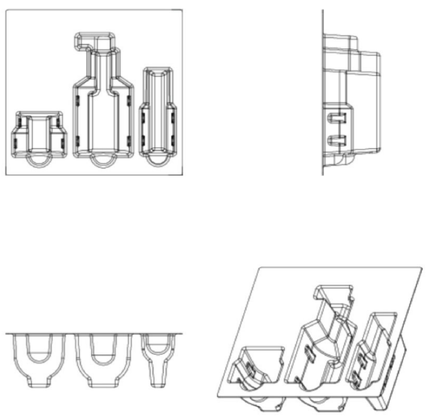

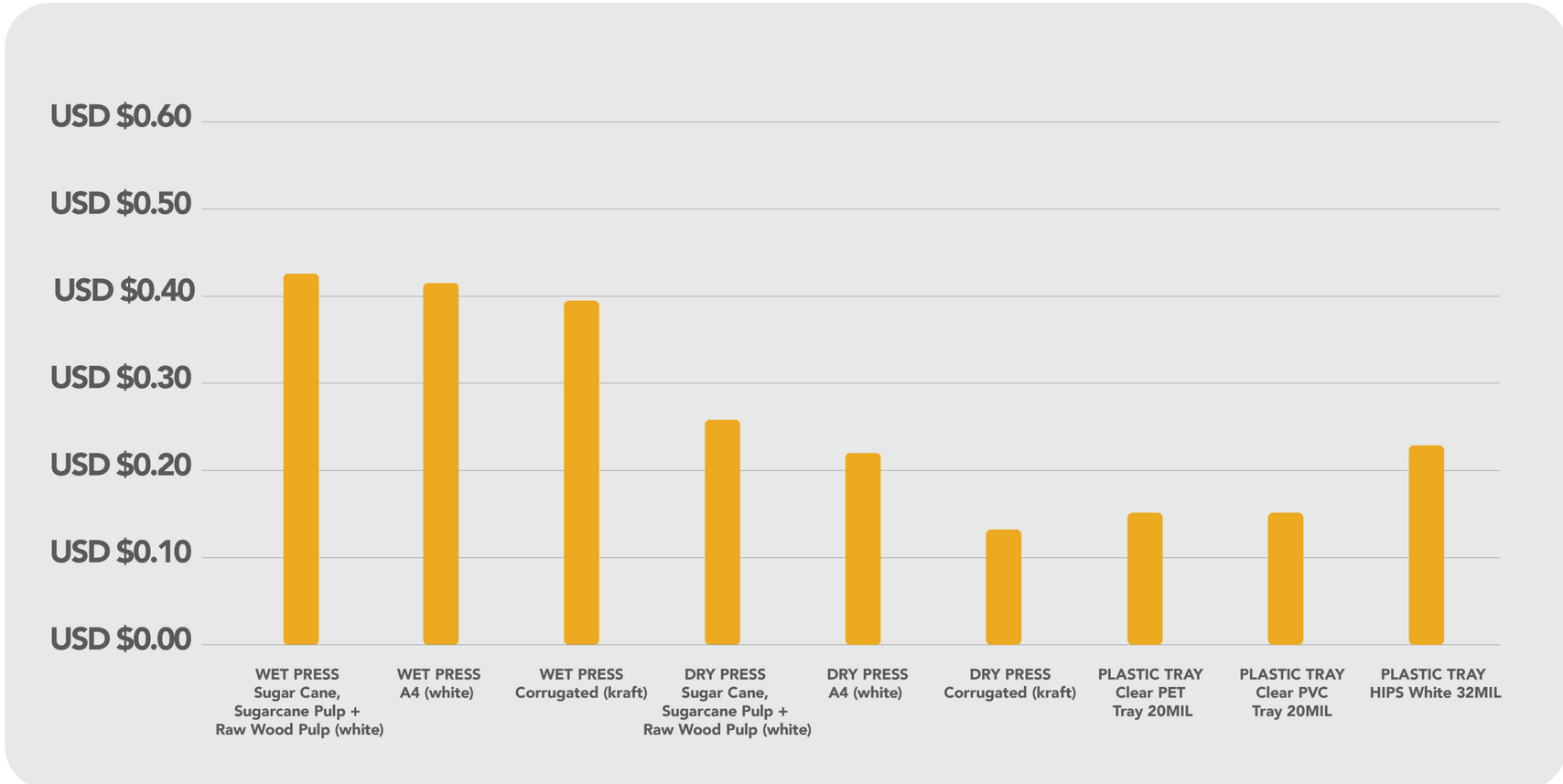

*Prices above are for reference only and are to be used solely to illustrate comparative costs

*Tooling cost will vary depending on manufacturing process and material chosen

*Minimum order quantity will vary depending on material and process chosen